3. Installations

3-1 Document Tray

1. Pull the document tray upward.

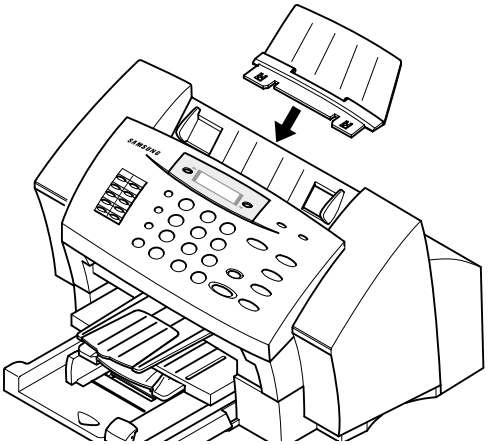

2. Fold out the extender on the document tray.

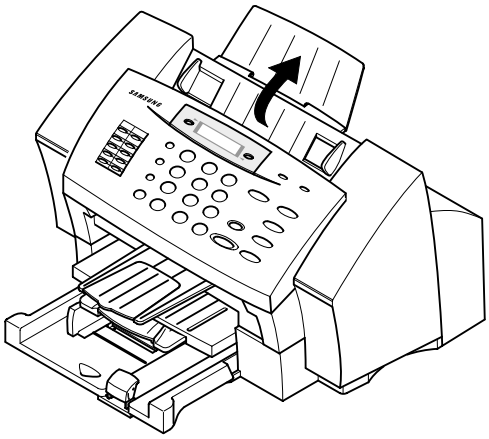

3-2 Document Exit Tray

1. Insert the two tabs on the document exit tray into the slots on the front of your machine.

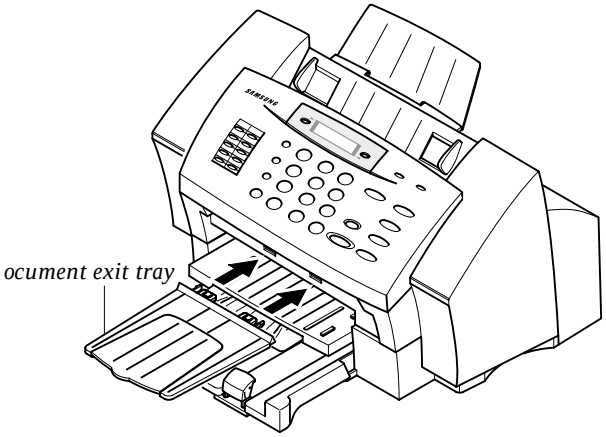

2. Fold out the extender, if necessary.

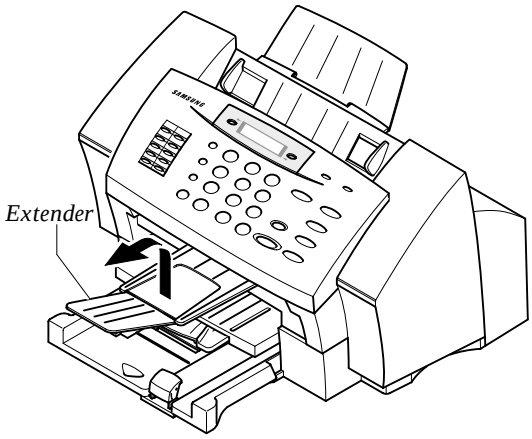

3-3 Telephone Line

Plug one end of the telephone line cord into the TEL LINE jack and the other end into a standard phone wall jack.

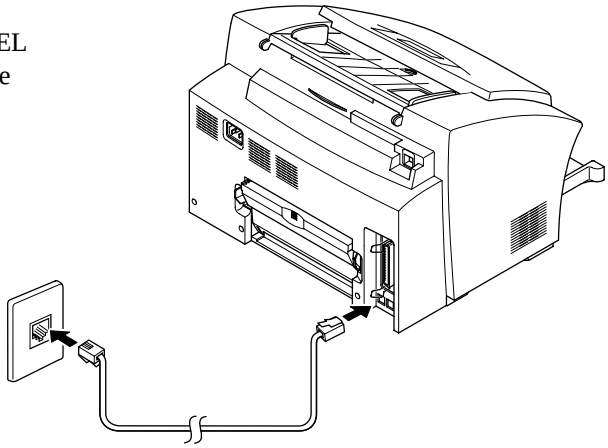

3-4 Extension Phone (Optional)

Plug one end of the modular cord into the EXT.TEL jack on the back of your machine.

Plug the other end of the cord into a modular jack on a telephone answering device or a regular telephone to use as an extension.

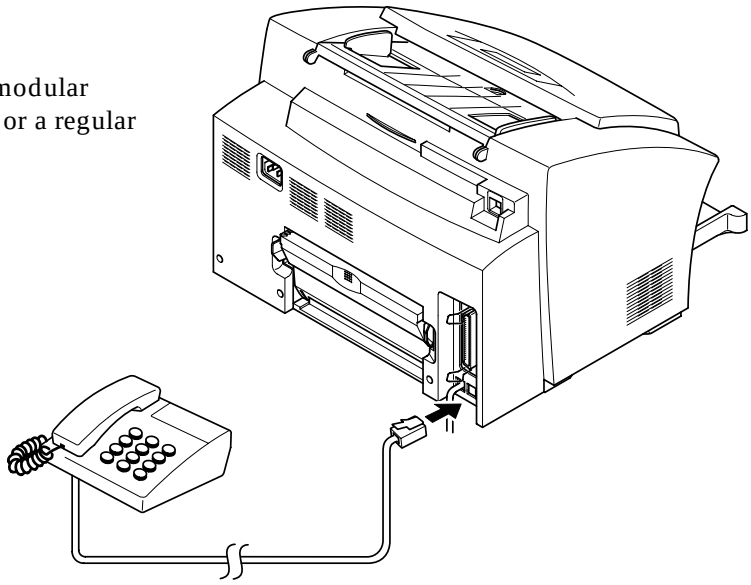

3-5 AC Power Cord

Plug one end of the cord into the back of the machine and the other end into a standard, grounded 3-prong AC power outlet.

The machine turns on. All lamps on the control panel light up and the LCD displays 'SYSTEM INITIAL' then 'PAPER OUT'. Load the paper as described on page 3-4.

If you want to turn it off, unplug the power cord.

Note : If documents are deleted from memory due to a power failure, the machine automatically prints out a Power failure report after power is supplied.

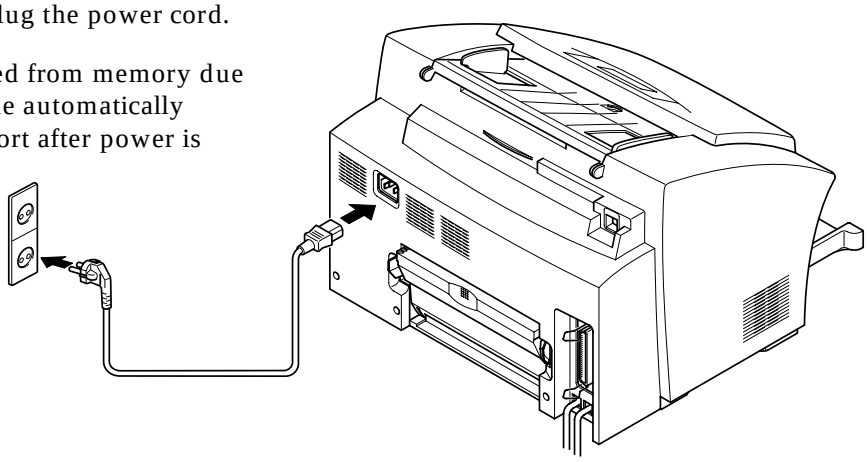

3-7 Installing Print Cartridge

3-7-1 Print Cartridge

1. When you install a new print cartridges.
   Press SETUP,MENU & START button.
   Lift the control panel 1 with your hand and open the cartridge compartment cover 2.

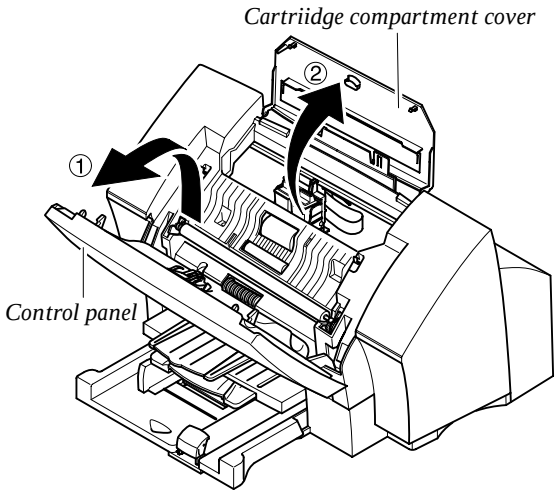

2. If you are replacing used cartridges, remove the old cartridges.
   Press SETUP,MENU & START button.
   Pull the print cartridges handle toward you until you hear a click, then remove the print cartridges.

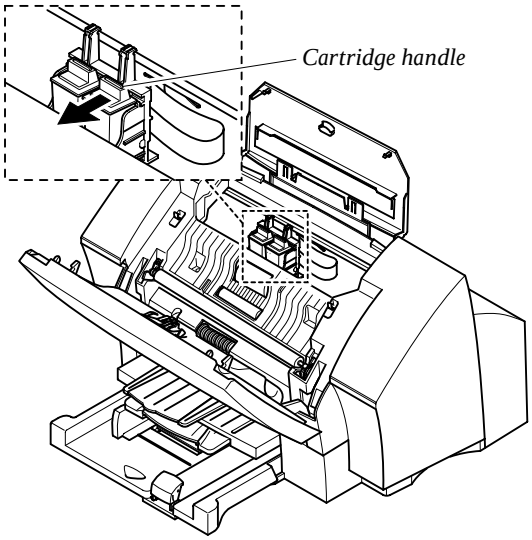

3. Remove the new print cartridges from its packaging. Hold the print cartridges by the black areas or colored top only. Do not touch the copper area.

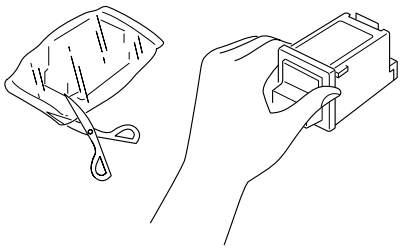

4. Carefully remove the tape covering the printhead. Be sure to remove all the tape.

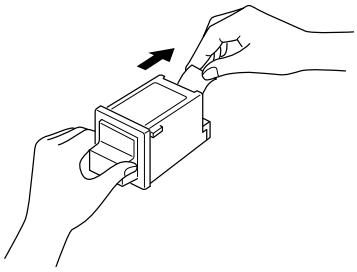
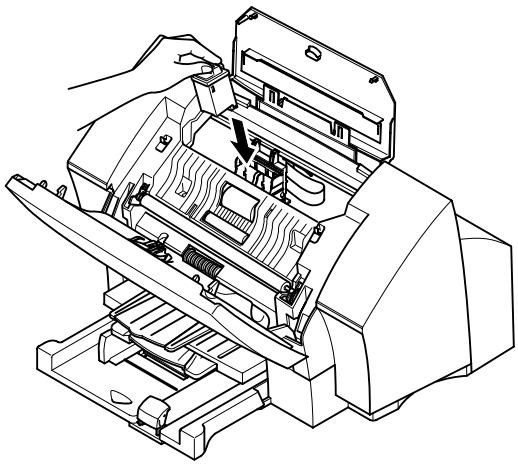
5. Insert the print cartridges in the carrier.